PREFAB CONCRETE ELEMENTS FOR SPECIFIC APPLICATIONS

www.cbs-beton.com

BAR RESTAURANT
DE SPA

CONTENT

4 Semi-circular and straight benches

5 Stair - Step - Seat & Borders

6-7 Gutters with metal grid, kabel-, and interlocked gutters

8 Sand/water separator for interlocked gutters

9 Infiltration Stormwater Drain and Pipe

9 Concrete barrier walls

10-11 Headwalls

12 Concrete barrier walls

13 Grave Vaults

14 Prefabricated Concrete Walls for Pools

15 Retaining walls with print

16 Railway station platforms

17 Concrete wall panels

19-20 Stoneboxen

20 Underground waste container - Concrete barrier, trailer and parking blocK

21 Types of lifting hooks

22-23 Realisations

STRAIGHT BENCHES

Are you looking for a stylish and durable solution for your outdoor space?
Our concrete benches combine modern design with robust quality, making them the perfect addition to any park, square, garden, or commercial setting.

Stylish Design
The straight shape of these benches adds a refined, architectural touch to any space. Whether you prefer a rustic, modern, or minimalist style, these benches seamlessly blend into any environment. Our benches invite interaction and create a natural gathering place for people.

Customization Options
We understand that every space is unique. That's why we offer customization options, allowing you to tailor the bench to your specific needs.

STRAIGHT BENCHES

	HEIGHT CM	LENGTH CM	THICK-NESS CM	WEIGHT
CMEZ40	65	300	40	1872
CMEZ50	65	300	50	2388
CMEZ100	50	200	100	2455

STAIR - STEP - SEAT & BORDERS

Our steps, stepping stones, and floor slabs add an extra dimension and aesthetic touch to any garden, driveway, or pathway. These elements can be integrated quickly and easily into your outdoor space.
The stair components feature rounded beveled edges, enhancing safety and walkability.

BORDER STONES: COMPATIBEL WITH CLF-GAMMA

	HEIGHT CM	LENGTH CM	THICK-NESS CM	WEIGHT	CONNEC-TION
CLF10GB30x100	30	100	10	73	tand-groef

STAIRCASE STEPS

	HEIGHT CM	LENGTH CM	THICK-NESS CM	WEIGHT
CTRAP15 100x40 glad	15	100	40	150
CTRAP15 120x40 glad	15	120	40	176
CTRAP15 100x40 met antislipstrook	15	100	40	150
CTRAP15 50x150	15	150	50	275
CTRAP15 50x200	15	200	50	366

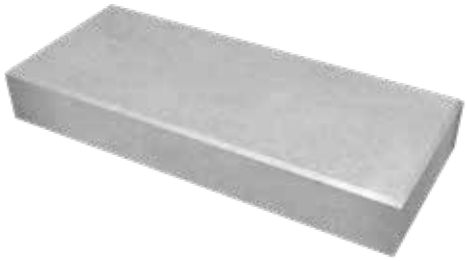

OUTDOOR FLOORING

	HEIGHT CM	LENGTH CM	THICK-NESS CM	WEIGHT
CPLAAT14	14	200	200	1363
CPLAAT14	14	100	200	679

TRIBUNES

	HEIGHT CM	LENGTH CM	THICK-NESS CM	WEIGHT
CTRI92 40x500	40	500	92	1766

GUTTERS WITH METAL GRID, KABEL-, AND INTERLOCKED GUTTERS

The drainage and cable gutters are ideal for the passage of water, cables, or gas pipelines. Interlocked gutters are mainly used in road traffic, industrial sites, parking lots, ports, gas stations, car washes, shopping centers, and airports.

CABLE GUTTERS/DRAINAGE GUTTERS

	HEIGHT CM	LENGTH CM	WIDTH CM	WEIGHT	TRAFFIC CLASS
CABLE GUTTERS/DRAINAGE GUTTER					
CKG2020-D400	26	200	48	236	D400
CKG3030-D400	38	300	48	676	D400
CKG4340-D400	53	300	60	1115	D400
CKG4450-D400	54	300	70	1197	D400
CKG85110-D400	100	400	130	4085	D400

INTERLOCKED GUTTER

	THICK-NESS CM	LENGTH CM	WIDTH CM	WEIGHT	TRAFFIC CLASS
CONCRETE GRID WITH SLOT *					
CKG2020-B125-DG 34x100	10	100	34	74	B125
CKG2020-D400-DG 34x100	14	100	34	74	D400
CKG3030-B125-DG 46x100	12	100	46	116	B125
CKG3030-D400-DG 46x100	17	100	46	180	D400
CKG4340-B125-DG 60x100	14	100	60	195	B125
CKG4340-D400-DG 60x100	20	100	60	283	D400
CKG4450-B125-DG 70x100	15	100	70	246	B125
CKG4450-D400-DG 70x100	22	100	70	365	D400
CKG85110-B125-DG 130x200	20	200	130	1225	B125
CKG85110-D400-DG 130x200	25	200	130	1545	D400
CONCRETE COVER					
CKG2020-B125-D 34x100	10	100	34	74	B125
CKG2020-D400-D 34x100	14	100	34	74	D400
CKG3030-B125-D 46x100	12	100	46	116	B125
CKG3030-D400-D 46x100	17	100	46	180	D400
CKG4340-B125-D 60x100	14	100	60	195	B125
CKG4340-D400-D 60x100	20	100	60	283	D400
CKG4450-B125-D 70x100	15	100	70	246	B125
CKG4450-D400-D 70x100	22	100	70	365	D400
CKG85110-B125-D 130x200	20	200	130	1225	B125
CKG85110-D400-D 130x200	25	200	130	1545	D400

* on demand

Afwateringsgoot of kabelgoot met betonrooster/deksel

De afvoer- en kabelgoten lenen zich uitstekend voor de doorvoer van water, kabels of gasleidingen. Verholen goten worden vooral toegepast bij wegverkeer, industrieterreinen, parkings, havens, tankstations en carwashes, bij shoppingcenters en luchthavens.

Cable gutters/Drainage gutter, load Class D400 (EN1433)

External Dimensions (HxLxW)	**38x300x48 cm**
Internal Dimensions (HxLxW)	**30x300x24 cm**
Weight of Drain:	**697 kg**
Concrete Quality:	**C60/75**
Steel Quality:	**B500A**
Traffic Class:	**D400**
Lifting System:	**KKA: 3x1.3T**
Application:	**Logistics centers, industry, parking areas, etc.**

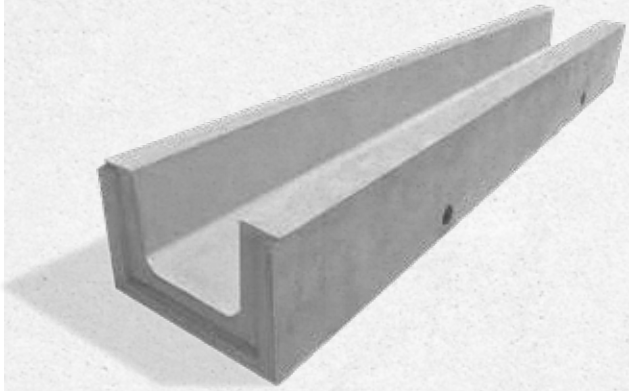

Cover with slots, load Class D400 (EN1433) *

Dimensions (HxLxW):	**17x100x46 mm**
Weight of Concrete Grate:	**164 kg**
Concrete Quality:	**C60/75**
Steel Quality:	**B500A**
Traffic Class:	**D400**
Lifting System:	**KKA: 3x1.3T**
Application:	**Logistiek center, industrie, parking,...**

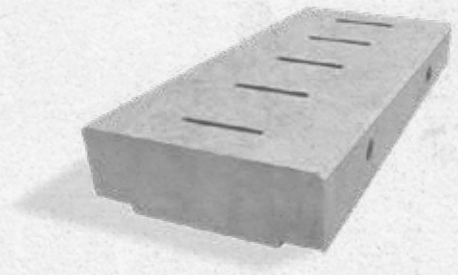

Cover, load Class D400 (EN1433)*

Dimensions (HxLxW):	**17x100x46 mm**
Weight of Concrete Grate:	**180 kg**
Concrete Quality:	**C60/75**
Steel Quality:	**B500A**
Traffic Class:	**D400**
Lifting System:	**KKA: 3x1.3T**
Application:	**Logistiek center, industrie, parking,...**

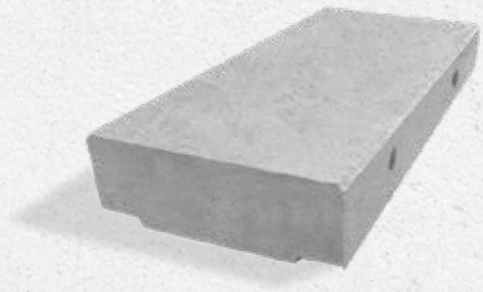

SAND/WATER SEPARATOR FOR INTERLOCKED GUTTERS

Every 24 to 26 meters, a sand trap pit is provided between the hidden gutters, ensuring that debris and sand are captured before flowing into the drainage system.

The hinging mechanism of the grate makes cleaning the sand trap very easy.

Open Sand/water separator with Cast Iron Street Grate

The Sand/water separator is suitable for all traffic classes. The cast iron lid can hold up to a load B125 .

The inlet (male and/or female connection) is positioned 16.5 cm from the center of the opening to the top of the Sand/water separator.
The outlet is a PVC connection socket Ø160mm, located 21.5 cm from the center of the opening to the top of the Sand/water separator.
The capacity of the Sand/water separator is a large 32 liters.

Features: There are 5 connection types.

- AT 1 – Between two hidden trenches
- AT 2 – End pit open on the left
- AT 3 – End pit open on the right
- AT 4 – T type(*)
- AT 5 – L type

(*) = on demand

	SAND/WATER SEPARATOR					
	HEIGHT CM	LENGTH CM	THICKNESS CM	WEIGHT	LIFTING HOOKS KKA	CONCRETE QUALITY
CVHG-ZV 81x49,5	81	49,5	49,5	360	2 x 2,5 T	C50/60

H 81 x L 49,5 x B 49,5 cm

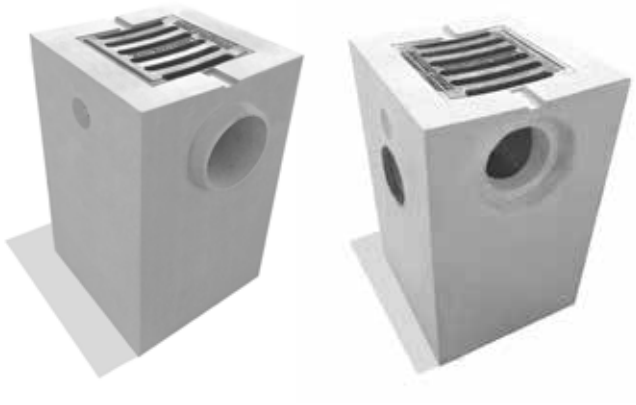

Upper view

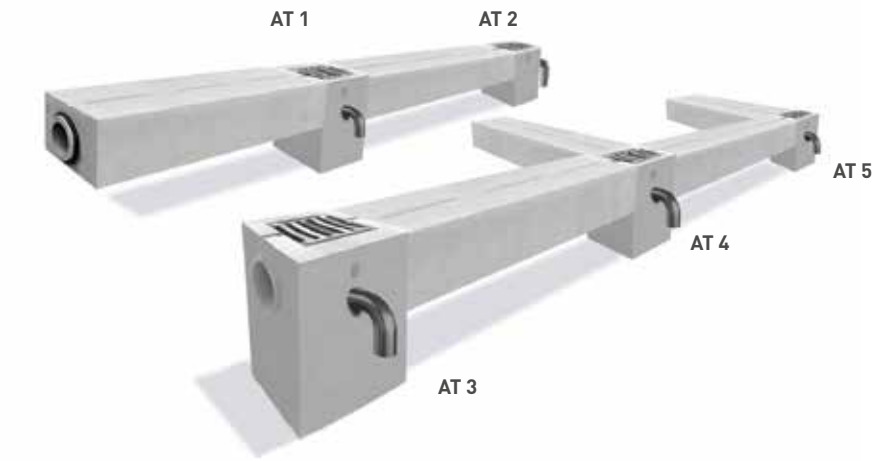

(Standaard B125 traffic classe)

HEADWALLS

Headwalls: Efficient Water Management and Protection

Headwalls play a crucial role in modern water management systems.

Headwalls are solid, concrete structures that mark the end of a culvert, pipe, or drainage system. They help prevent erosion and ensure controlled water flow.

HEADWALLS

Prefab Headwalls come in many different types and sizes. This diversity results from significant variations in thickness, length, and height, combined with straight, rounded, and slanted finishes. The connection system, concrete composition, and concrete cover also play a role.
CBS Beton offers a complete range of Headwalls. In addition to the standard range, there is the option to have custom end walls made.

CBS Beton also manufactures end walls with slanted side walls.

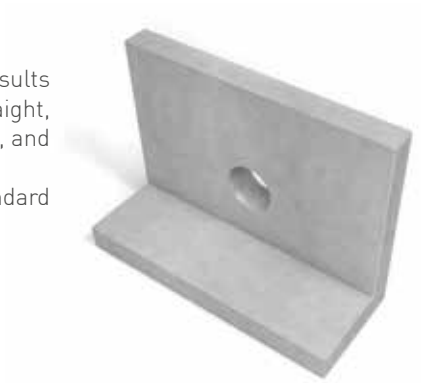

	STANDARD	CUSTOM WORK
HIGHT	60 cm t.e.m. 250 cm	60 cm up to 500 cm
LENGHT	60 cm t.e.m. 400 cm	60 cm up to 1600 cm
DICKNESS	20 cm	10 cm - 20 cm - 25 cm - 30 cm - 40 cm
CONNECTION	ross - Half-wall with Slip Ring - Slanted with Insertion Pipe	ross - Half-wall with Slip Ring - Slanted with Insertion Pipe
TYPE	Slipring - Socket- others	Slipring - Socket - others
OVERLAST	10 kN/m² t.e.m. 20 kN/m²	10 kN/m² t.e.m. 40 kN/m²
CONCRETE QUALITY	C60/75 self-compacting	All traffic classes - C60/75 self-compacting
CONCRETE COVER	30 mm	30 mm - 40 mm - 50 mm
ENVIRON CLASS	XA3 - XF4	XA3 - XF4
AMBIENT CLASS	EA3 - EE4	EA3 - EE4
FINISH	Straight - Rounded - Slanted	Straight - Rounded - Slanted

Headwall
with slanted corners

Headwall
with rounded corners

Headwall
slanted

- All standard headwalls meet the BENOR quality mark for Belgium.
- All standard headwalls comply with the standard specification 250 version 3.1 - chapter 3 - items 41 and 42 of the Roads and Traffic Agency.

CONCRETE BARRIER WALLS

Our concrete barriers serves mainly the safety of construction sites, events, industrial environments and private areas. In an increasingly turbulent climate, our barrier walls provide additional stability against strong winds and reduce the risk of being blown over or pushed over.

Thanks to the boundary walls from CBS Beton, the walls remain sturdier during strong gusts of wind, compared to rubber construction fence feet.

		HEIGHT CM	LENGTH CM	BASE CM	WEIGHT	KKA
CONCRETE BARRIER						
11827	**CAW12**	50	350	38	920	2 x 1,3 T
CONCRETE BARRIER WITH METAL TUBE PROFILE FOR HERAS FENCES						
11828	**CAWH12**	50	350	38	920	2 x 1,3 T
CONNECTION CONNECTOR CAW12H						
10817	**CAWH12**					

CAW12 50x350: Without tube profile

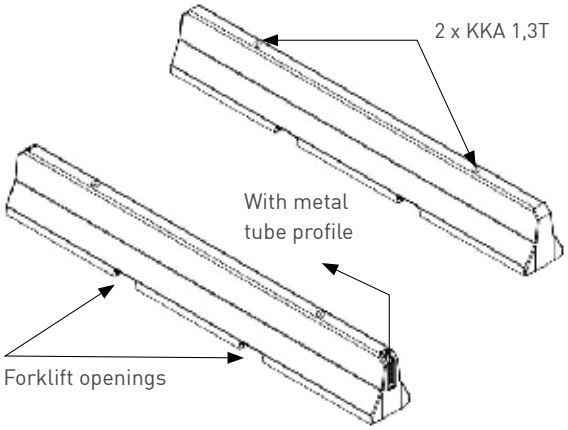

CAW12H 50x350: With metal tube profile

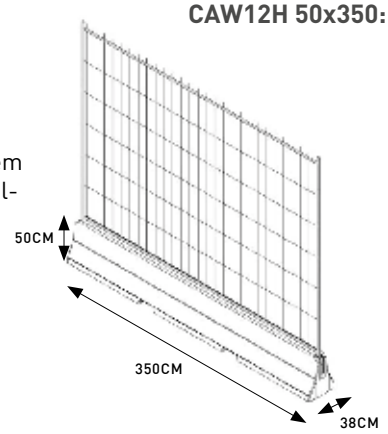

INSTALLATION

Easy to install using 2 lifting devices of type KKA on the top side or can be moved with a forklift using openings at the bottom.

2 TYPES OF WALLS

• **CAW12 50x350**: Concrete barrier wall without sleeve profile for Interlocking
• **CAW12H 50x350**: Concrete barrier wall with a Interlocking system at the ends of the wall (for connecting the walls walls and/or installation of a fence)

OPTIONAL ACCESSORIES

Galvanized connector for linking two boundary walls.

MEASUREMENTS AND WEIGHT

• Standard format: H 50 x L 350 x B 38 cm
• CAW12(H) 50x350: 930 kg

Tube profile lateral

Tube profile top view

Galvanized connector between 2 fences

GRAVE VAULTS

SUSTAINABLE PREFABRICATED CONCRETE GRAVE VAULTS

CBS Beton has produced an entirely new range (CGRAFK). Our grave vaults are made from self-compacting concrete and are fully smoothly formed. At the bottom, an embedded rubber connection socket is provided for ventilation. The position of the connection socket ensures that water can never accumulate in the vault.

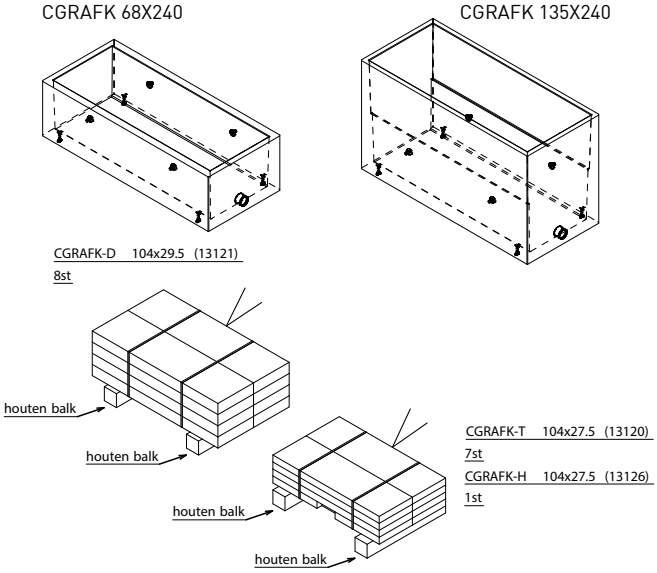

2 TYPES OF GRAVE VAULTS:

1) Single Grave Vault
(internal dimensions: L 224 x W 82 x H 62 cm)

2) Double Grave Vault (internal dimensions:
L 224 x W 82 x H 125 cm)

The top opening of both types of grave vaults is covered with 8 removable concrete lid plates. The double grave vault also includes 8 partition plates (7+1) to divide the vault into two sections.

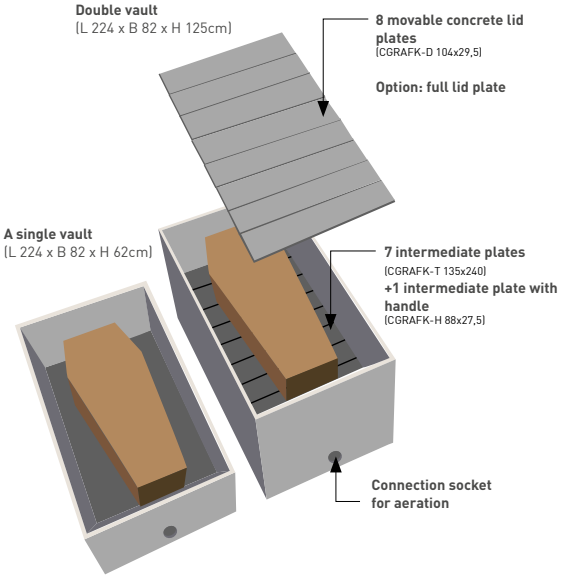

Advantages:

- ✓ The concrete grave vaults are made of high-quality self-compacting concrete, quality C60/75 GB EE3 XC4 XF1 14 PREV 2 AR 3 CEM I LA WAI (0.50) BENOR.
- ✓ A prefabricated concrete vault includes a certified, rust-free lifting device.
- ✓ All grave vaults are marked with an indelible mark indicating the production date.
- ✓ The grave vault is made in a single piece.
- ✓ Embedded rubber connection socket.
- ✓ No sharp ribs or protrusions.

	GRAVE VAULTS					
	HEIGHT CM	LENGTH CM	THICKNESS CM	WEIGHT	LIFTING HOOKS KKA	CONCRETE QUALITY
CGRAFK 68x240	68	240	93	1293	4 x 2,5 T	C60/75
CGRAFK 135x240	135	240	93	2012	4 x 2,5 T	C60/75

	CONCRETE PLATES					
	HEIGHT CM	LENGTH CM	THICKNESS CM	WEIGHT	CONCRETE QUALITY	NUMBER PER PACKAGE
CGRAFK-D 104x29,5	8	104	29,5	60	C60/75	8
CGRAFK-T 88x27,5	5	88	27,5	29,5	C60/75	7
CGRAFK-H 88x27,5	5	88	27,5	29	C60/75	1

* There is an option to order additional lid and partition plates.

PREFABRICATED CONCRETE WALLS FOR POOLS

These walls are used to build a swimming pool: through the openings at the bottom, the plates are anchored in the bottom slab poured on site by means of reinforcement bars. The advantage of these elements is their tongue and groove connection and the greater possibilities for fitting (adjustment in length).

	SWIMMING POOL						
	HEIGHT CM	LENGTH CM	WEIGHT KG	LIFTING HOOKS KKA	CONNECTION	CONCRETE QUALITY	POSITION BLOCK CM
CSAN 175x300	175	300	1900	2 x 2,5 T	tand - groef	C60/75	22,5x30

	POSITION BLOCK					
	HEIGHT CM	LENGTH CM	WIDTH CM	WEIGHT KG	LIFTING HOOKS KKA	CONCRETE QUALITY
CSBLOK 22,5x30	22,5	45	30	41	-	C60/75

Advantages of Prefabricated Concrete Walls for Pools

- Quick installation of modular walls
- The walls have a smooth surface, making them highly suitable for installing a liner
- Very strong and durable
- Many design possibilities
- Customizable in length

RETAINING WALLS WITH PRINT

Can it be a little more? Then CBS Beton can make walls with a print. The advantage of this method is that the print is provided in the formwork during production and therefore lasts as long as the retaining wall itself.

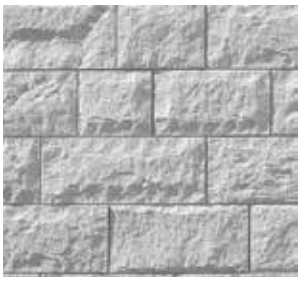

Pommern:
stone pattern

Brabant:
rock motif

Alster: vertical wood structure with invisible joint

Colorado: vertical wood structure with visible joint (8mm)

Other structures on demand

RAILWAY STATION PLATFORMS

Platform edges ensure that passengers can get on and off trains smoothly and safely. CBS Beton produces these precast concrete elements according to the BENOR-certificate of approval and Infrabel's technical regulations.

	RAILWAY STATION PLATFORMS					
	HEIGHT CM	LENGTH CM	BASE CM	WEIGHT KG	LIFTING HOOKS KKA	CONCRETE QUALITY
Perronb mod96 138x100	138	100	82	656	3 x 1,3 T	C60/75
Perronb mod96 138x200	138	200	82	1314	4 x 1,3 T	C60/75
Perronb mod96 VH 138x88	138	88	80	820	3 x 1,3 T	C60/75

VH = Vaste Hoek

CONCRETE WALL PANELS

Prefabricated wall panels are an efficient way to construct industrial and agricultural buildings, such as warehouses or storage facilities. With these wall panels, you can build quickly and cost-effectively. We offer standard panels, but custom solutions are always possible as well.

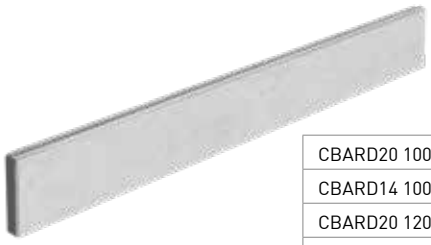

	CONCRETE WALL PANELS					
	HEIGHT CM	LENGTH CM	TICKNESS CM	WEIGHT KG	LIFTING HOOKS KKA	CONCRETE QUALITY
CBARD20 100x600	100	600	20	2900	2 x 2,5 T	C60/75
CBARD14 100x600	100	600	14	2030	2 x 2,5 T	C60/75
CBARD20 120x700	120	700	20	4060	2 x 2,5 T	C60/75
CBARD14 120x600	120	600	14	2440	2 x 2,5 T	C60/75

Other dimensions on request!

- Customization is possible
- The length of the plates can be adjusted

GABION BASKETS/STONE BOXES – MULTIFUNCTIONAL AND AESTHETIC

GENERAL

CBS Beton provides standard walls with stoneboxes. The stoneboxes with partitions are made of mesh and filled with stone. The mesh, protected against corrosion (aluminum +- zinc) has a mesh size of 50mm x 50mm and a wire thickness of 4mm. A stonebox basket is usually evenly divided into internal cells by one or more diaphragms.

The spacers and clips are made of the same alloy as the mesh (aluminum+zinc) to avoid dielectric avoid oxidation reactions between different metals. The spacers reinforce the cages and prevent deformation of the cladding. The staples connect the empty gabions and secure the baskets filled with stones. Gabions/stoneboxes are always placed in combination with retaining walls.

MONTAGE

Our system is very easy to install yourself. (CBS Beton does not provide installation services.)

A gabion basket/Stonebox is mounted against a retaining wall with a 20 cm gap. This means you need 1m³ of stones for 5m³ of gabion baskets.

We do not supply stones, but we recommend stones with a grain size of 60/100. Our system allows the baskets to be mechanically filled.

Finishing Options:
You can choose the finish of the gabion baskets/Stoneboxes:

- Sides: With or without a column (max. 2m long, standard 30cm wide).
- Top sections: With or without a "TOP" (max. 25cm high) and optionally with a return on the other side (see options 1-2-3).

Since the spacers are attached to the retaining walls after placement, any imperfections can be easily corrected.

Installation Guidelines:
Spacers should be attached every 40 cm using Turbo screws (Ø6mm).
If you have chosen the option without a "TOP", spacers must be placed lower than the height of the retaining wall.

IMPORTANT:

Always place the bracket attachment loops on the right side.

The cover or "TOP" is secured with plates, which must be fastened every 80 cm with Turbo screws.

To clamp the mesh to the spacers using staples, we offer a rental plier service. The first 10 days are free, after which a daily rental fee applies.

OPTION 1: Without top

OPTION 3: Gabion/Stonebox with top and back

OPTION 2: With top

Spacer attached with Turbo screws

3 OPTIES

OPTION 1: Without top

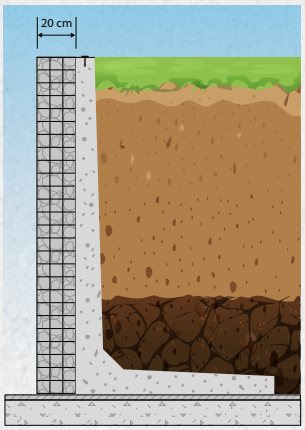

OPTION 2: With top

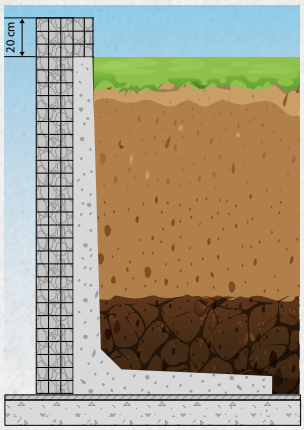

OPTION 3: With top and back

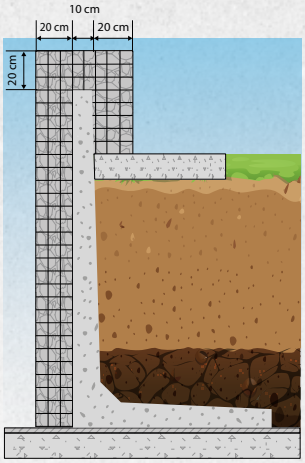

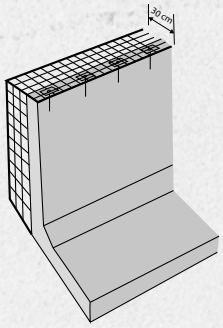

GABION TOP: Covered and secured with galvanized plates and screws.

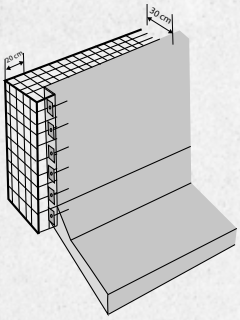

GABION HEAD: Covered and secured with galvanized plates and screws.

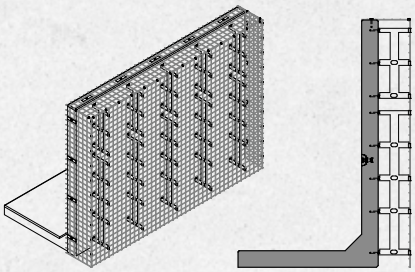

GABION WALL: Hooks (spacers) are attached every 40 cm using Turbo screws.

UNDERGROUND WASTE CONTAINER

Underground waste containers are ideal for cities and towns. No more odor nuisance, greater storage capacity and emptying costs remain lower. These round waste containers are 2/3 underground and 1/3 above ground. A lid is provided on top of the containers in plastic or metal. With the addition of the wood, they integrate perfectly into the environment.

	UNDERGROUND WASTE CONTAINERS SQUARE					
	HEIGHT CM	LENGTH CM	WIDTH CM	WEIGHT KG	LIFTING HOOKS KKA	CONCRETE QUALITY
CSE4M3 255x185	255	185	185	4740	4 x 2,5 T	C60/75
CSE5M3 264x185	264	185	185	5460	4 x 2,5 T	C60/75

CONCRETE BARRIER, TRAILER AND PARKING BLOCK

The parking block, the safest and smartest parking device to protect your car when reversing or parking. They are easy to install with strong bolts in the ground.

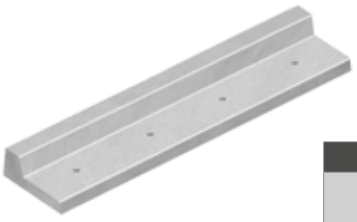

	CONCRETE BARRIER, TRAILER AND PARKING BLOC					
	HEIGHT CM	LENGTH CM	WIDTH CM	WEIGHT KG	LIFTING HOOKS KKA	CONCRETE QUALITY
CTROT80 33x400	33	400	78	1425	2 x 2,5 T	C60/75

TYPES OF LIFTING HOOKS

See technical sheet which lifting hooks are required for which type of walls.

- Ring Clutches (1) = KKA
- Anchor pin ring (RTA) (2)
- Lifting loop anchor = MRD24 - MRD42 (")

REALISATIONS

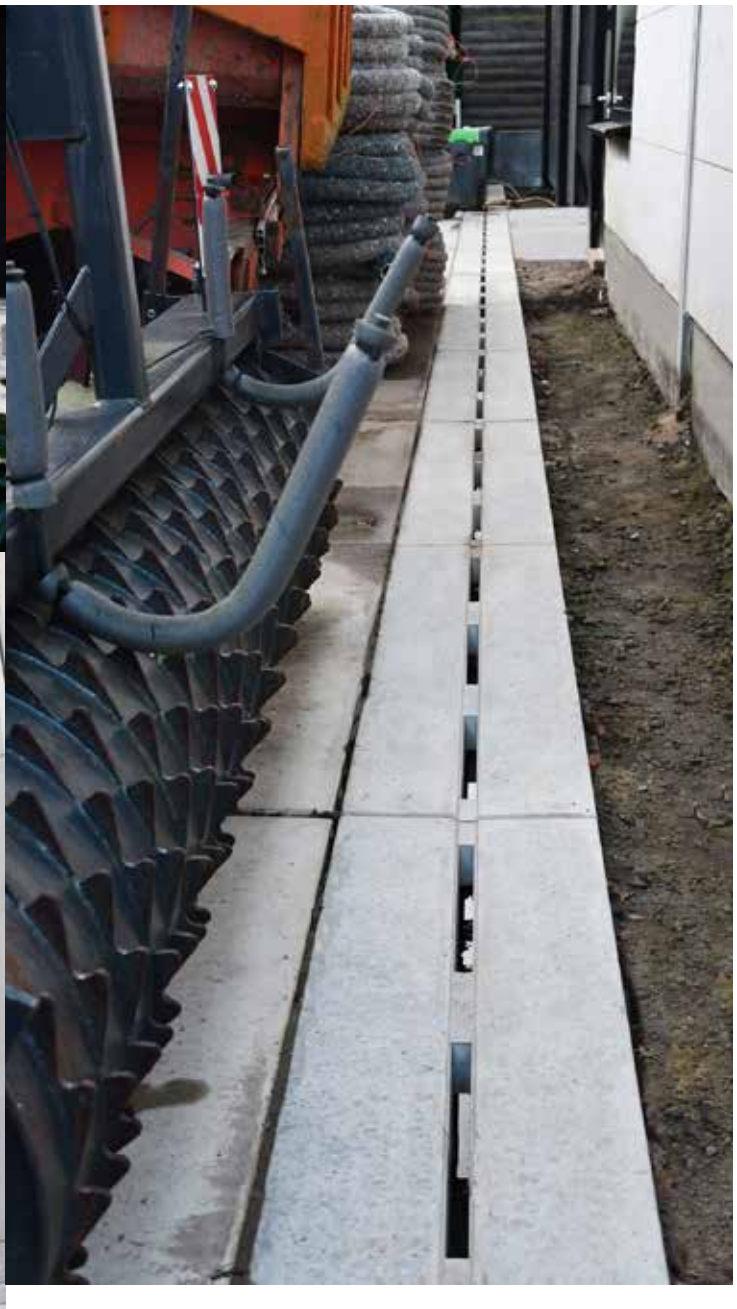

CBS Beton NV
Hooiemeersstraat 8, 8710 Wielsbeke, België.
P: + 32 56 61 75 37 - info@cbs-beton.com - www.cbs-beton.com

We would like to point out that the information and notes in this technical catalog do not constitute a complete and conclusive description. Rather, they are intended to supplement the generally recognized rules of construction engineering that the expert user must observe and to explain the installation and use of our products. In addition, we would like to point out that our products should only be used and installed by competent persons and that special attention should be paid to the proper handling and storage of our goods. We are always happy to assist you with the necessary advice and tips.

05/02/2025